JTC-4440 OPEL, VAUXHALL, CHEVROLET ENGINE TIMING TOOL SET - 1.0, 1.2, 1.4

Qty: Add to Inquiry List

Prev Next
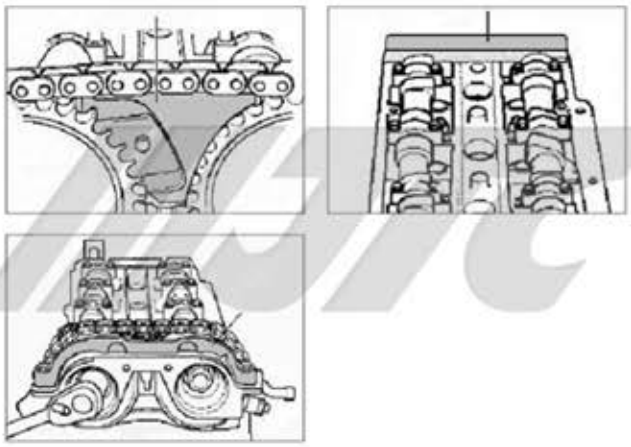
- For checking and setting the camshaft and crankshaft in correct TDC position.
- Applicable: Vauxhall/Opel/Chevrolet 1.0, 1.2, 1.4 petrol engine (chain)
- Engine code: 1.0: Z10XE, Z10XEP, AXEP
  1.2: A12XEL, Z12XE, Z12XEP, A12XER
  1.4: A14XEL, A14XER, LDD/A14XFL, LUJ/A14NET, LUU, Z14XE, Z14XEP A14NEL.